GIO REEDED DOOR HANDLE ON 200MM PLATE

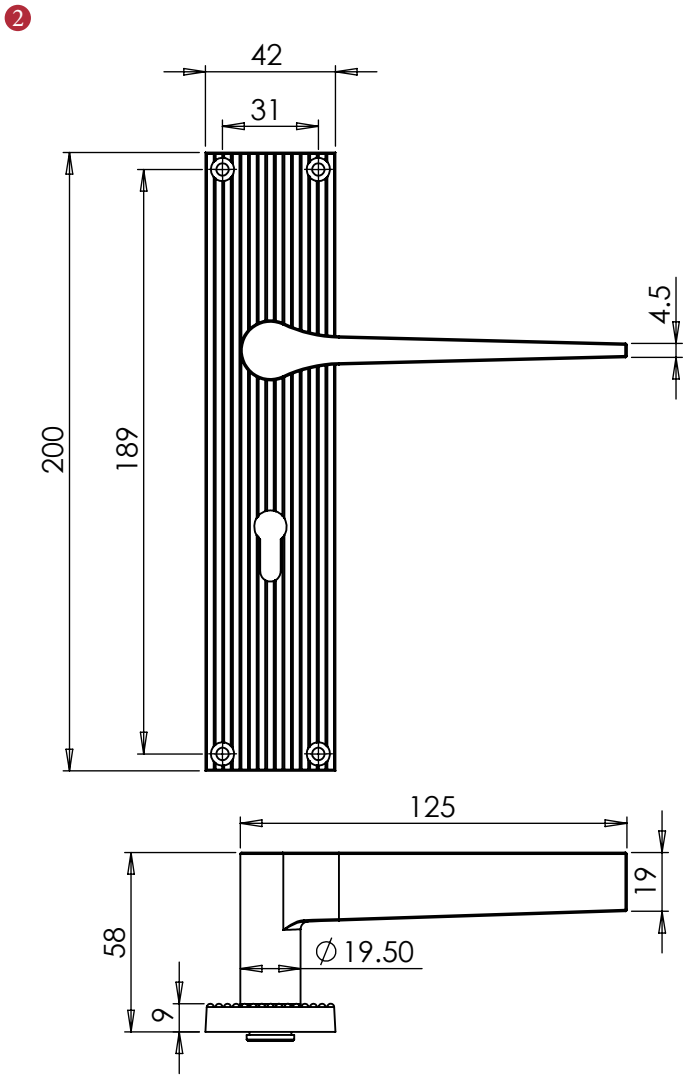

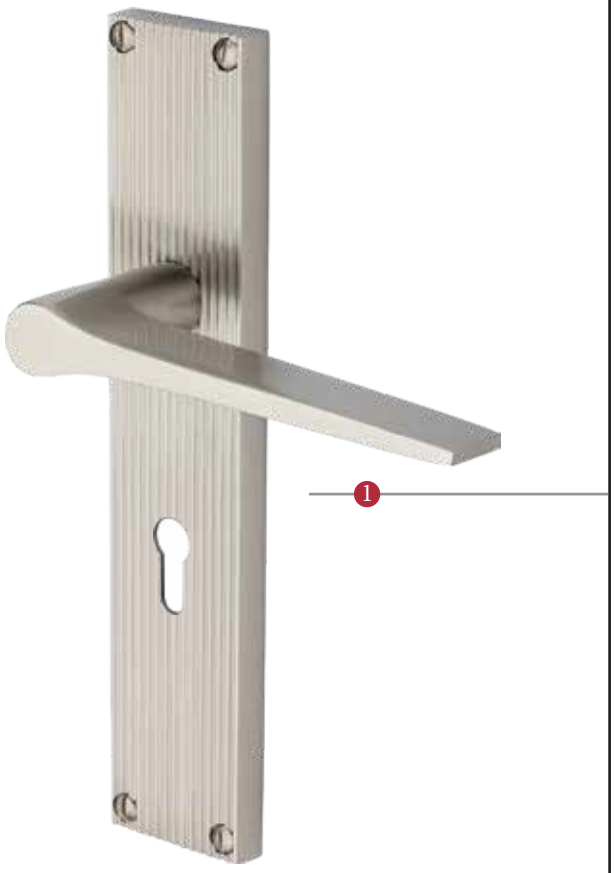

This lock handle is suitable for use with most U.K. sashlocks with 57mm CTC.
For a new interior door installation we would recommend using our York 3 lever sashlock from the list below.

Spindle : 7.8mm x 85mm - 1pc.

Iron starter screw x 1pc.
Drill pilot holes, use the starter screw to cut a thread

8x Brass wood screws
Fasten the brass screw into the pilot hole

Box Contains	① Lever handle illustrated	② 1x 85mm spindle suitable for 35mm & 45mm thick door	③ 1x Iron screw 8x Brass wood screws

FINISHES

- MB Matt Bronze
- SB Satin Brass
- SN Satin Nickel
- AT Antique Brass
- PB Polished Brass
- PC Polished Chrome

3 LEVER SASHLOCK

(not Included, must be ordered seperately)

YKSL32N-AT	2½″ Antique Finish
YKSL32N-BLK	2½″ Black Finish
YKSL32N-MB	2½″ Matt Bronze Finish
YKSL32N-PB	2½″ Brass Finish
YKSL32N-PC&PN	2½″ Polished Chrome & Nickel Finish
YKSL32N-SB	2½″ Satin Brass Finish
YKSL32N-SN&SC	2½″ Satin Nickel & Chrome Finish
YKSL33N-AT	3″ Antique Finish
YKSL33N-BLK	3″ Black Finish
YKSL33N-MB	3″ Matt Bronze Finish
YKSL33N-PB	3″ Brass Finish
YKSL33N-PC&PN	3″ Polished Chrome & Nickel Finish
YKSL33N-SB	3″ Satin Brass Finish
YKSL33N-SN&SC	3″ Satin Nickel & Chrome Finish

M Marcus Ltd., Dudley

Product Code	Material
RR4700	Solid Brass

Sizes shown are in mm and approximate.
We reserve the right to amend where necessary and without any prior notice.

Property of M Marcus Ltd. ©